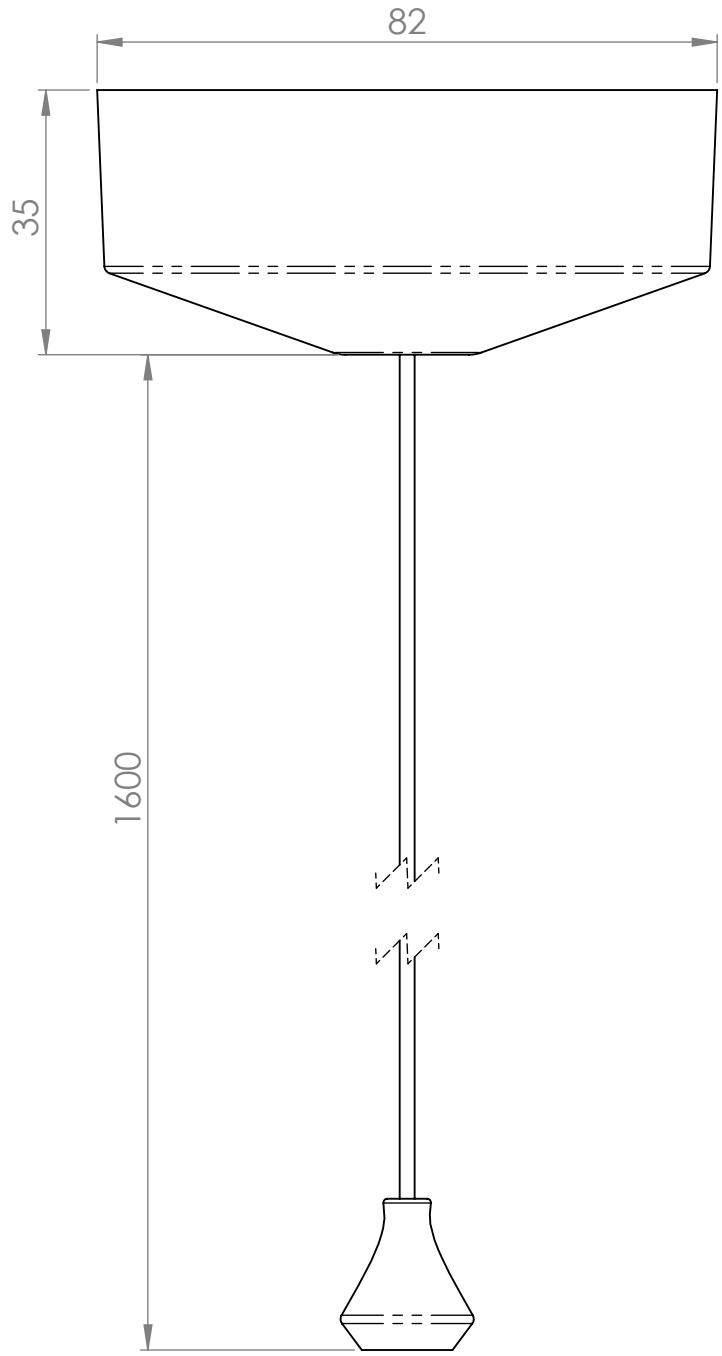
82
35
1600